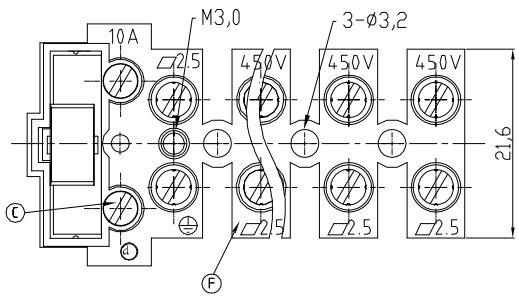

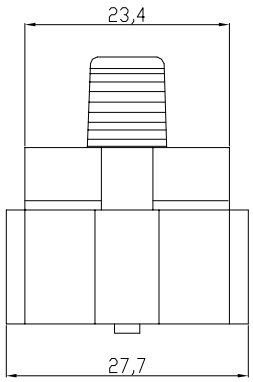

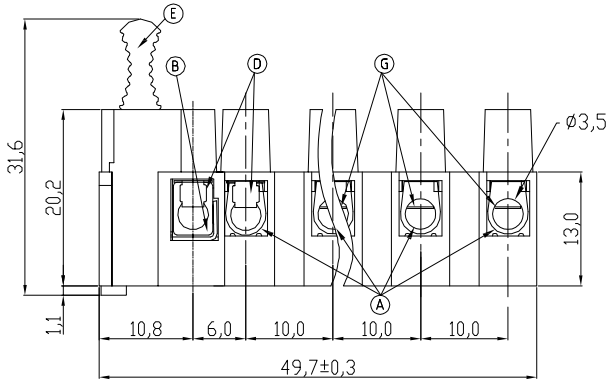

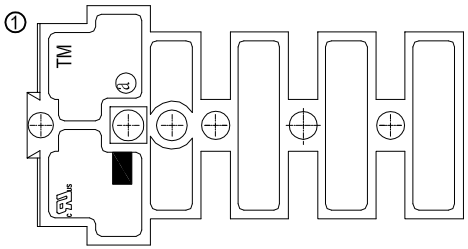

Material

Ⓐ Terminal body(metal housing of double): Brass(CuZn),Ni plated
Ⓑ Terminal body(metal housing of single): Brass(CuZn),Ni plated
Ⓒ Terminal screw: Steel Zinc plating "-" slot type
Ⓓ Wire guard(short): Stainless steel
Ⓔ Insulator(lever): Thermoplastic (UL94V-0)
Ⓕ Insulator(housing): Thermoplastic (UL94V-0)
Ⓖ Wire guard(long): Stainless steel

Electrical	cULus	VDE
Voltage rating:	400VAC	/ 450VAC
Current rating:	10A	/ 24A
Wire range:	0.34-2.5mm²	
Solid wire(AWG):	14-22	
Stranded wire(AWG):	14-22	
Torque(Lb-In):	3.5	/ 0.5
Screw:	M3	
Wire strip length:	7-8mm	
Withstanding Voltage:	1.8KV/2.5KV	
Operating temperature:	-40°C to +115°C	
Safety Approval:	c us	

RoHS compliant
Unit: mm

① File No.: E349947

Scale	Free
TOLERANCE	
X.	±0.50
X.X	±0.30
X.XX	±0.10
DIM	TOL
X.°	±1°
Angle	TOL

Id.	Modification	Date	Name
①	Update to new drawing and add UL	15.03.2016	Amy
⓪	Updating	19.04.2010	Alex

	Date	Name
Drawn	19.04.2010	Alex
Approved	15.03.2016	Amy

ASSMANN wsw components

Customer-No.

ASSMANN WSW-No. A-TB100-TM05

Drawing-No. ASS 2011B CO

rev01

Replace

Sheet